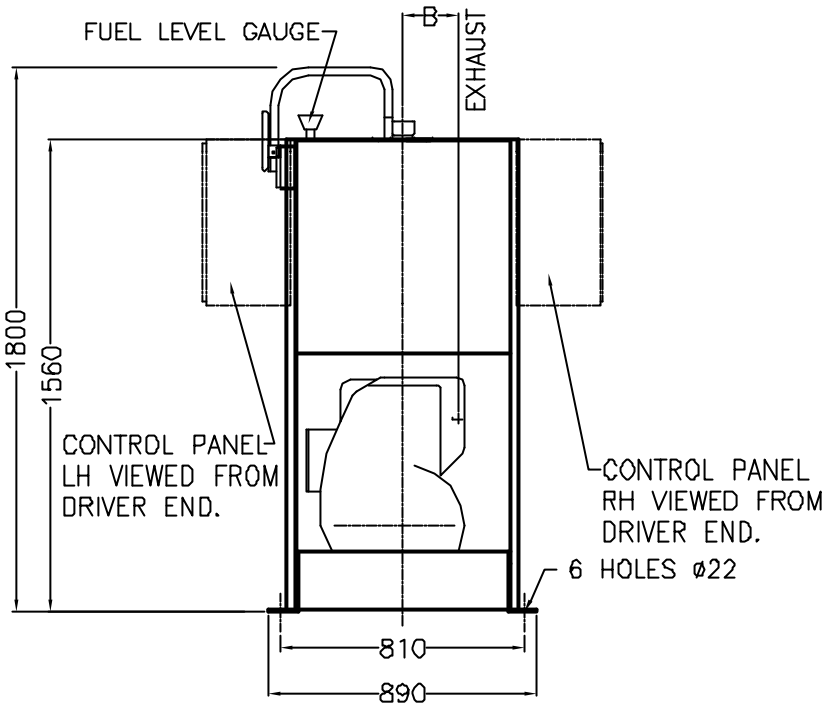

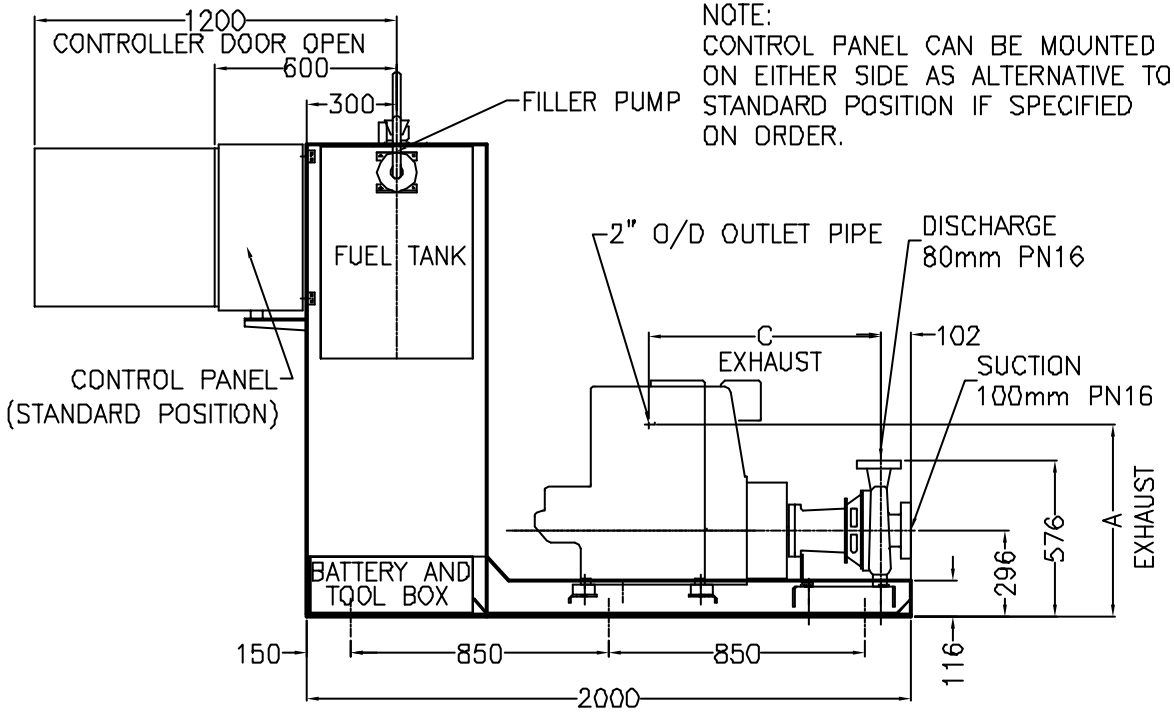

NOTE:
CONTROL PANEL CAN BE MOUNTED ON EITHER SIDE AS ALTERNATIVE TO STANDARD POSITION IF SPECIFIED ON ORDER.

MODEL No.	DRIVER	GROUP No.	A	B	C	WEIGHT (Kg)	CONTROLLER SDE
4x3x8.5DLCAF26	FD35	011	562	250	744	795	RIGHT
		012					LEFT
		013					END
4x3x8.5DLCAF18	FD25	021	465	270	321	775	RIGHT
		022					LEFT
		023					END

HAZARD GROUP	MODEL No.
EXTRA HIGH	4x3x8.5DLCAF18
EXTRA HIGH	4x3x8.5DLCAF26
OH1/30	4x3x8.5DLCAF18
OH1/45	4x3x8.5DLCAF26
OH2/15	4x3x8.5DLCAF18
OH2/30	4X3X8.5DLCAF26
OH3/15	4x3x8.5DLCAF18
OH3/30	4x3x8.5DLCAF26

Third Angle Projection

All dimensions in millimetres unless otherwise stated

Tolerances (general): Linear ± 0.5, Angular ± 0.5°

Material: NA

Structural sections to BS4 part 1
Hollow sections to BS4848 part 2

REV	ECO No.	DATE	SIGN
F			
E			
D			
C	8302	11JAN02	NGS
B	8291	13AUG01	NGS
A	8279	21FEB01	NGS

ARMSTRONG PUMPS LTD
COLCHESTER ESSEX UK

SCALE: NTS
DATE: 21FEB01
DETAIL NAME: 08316
CHECKED:
DRAWN: NGS
A3

© ARMSTRONG PUMPS LIMITED
This drawing is not to be used for general production unless with an original (red) CONTROLLED COPY except when production order specifies drawing no. & revision letter.

TITLE: DIESEL FIRE PUMP 4x3x8.5 FD25 & FD35

DRAWING NUMBER: UKD08315